| | |
|---|---|
| MANUFACTURER: | Roband Australia |
| CATEGORY: | Hot Food Bars |
| MODEL / DESC: | E Series |
| ORIGIN: | Australia |
| WARRANTY: | 1 Year (refer to website) |

Single Row

Double Row

AUSTRALIAN MADE AND OWNED

ROBAND®

# Straight Glass Hot Foodbars

## Holds Hot Food at Serving Temperature | Various Configurations | Wet or Dry Operation

*The straight glass hot food display bars are designed to enhance the presentation of food, whilst maintaining it at the correct serving temperature. There are a wide range of sizes and options available to cater for various combinations of gastronorm pans up to 100 mm deep. A set of 1/2 size 65 mm pans is included with each foodbar.*

*The double row hot displays feature the same profile as the straight glass refrigerated food display bars, so they can be used together to complete a modern, uniform display of hot and cold food.*

*Refer to Food Bar and Bain Marie Accessories Specification Sheet for optional accessories.*

## FEATURES

- Stainless steel construction with tubular frame
- Overhead heating and illumination by stylish heat lamps manufactured from extruded aluminium, specifically designed to breathe
- Dura-life stainless steel elements for prolonged element life
- Energy regulator control
- Wet or dry operation^
- Safety lock ball valve drain
- Streamlined for easy cleaning
- Removable cross bars
- Thermometer

^ Machines should not be left unattended.



E24 (double row) with various pan sizes



E14 (single row)

## SPECIFICATIONS

| MODEL | NO. OF PANS | POWER Watts | CURRENT Amps | DIMENSIONS w x d x h (mm) |
|---|---|---|---|---|
| SINGLE ROW | | | | |
| E14 / E14RD | 4 | 2150 | 9.4 | 1135 x 420 x 675 |
| E16 / E16RD | 6 | 2300 | 10.0 | 1665 x 420 x 675 |
| DOUBLE ROW | | | | |
| E22 / E22RD | 4 | 1450 | 6.3 | 705 x 615 x 675 |
| E23 / E23RD | 6 | 2300 | 10.0 | 1030 x 615 x 675 |
| E24 / E24RD | 8 | 3200 | 13.9 | 1355 x 615 x 675 |
| E25 / E25RD | 10 | 3450 | 15.0 | 1680 x 615 x 675 |
| E26 / E26RD | 12 | 3450 | 15.0 | 2005 x 615 x 675 |

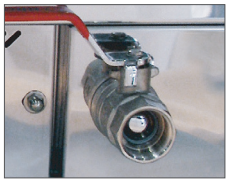

Safety lock ball valve drain

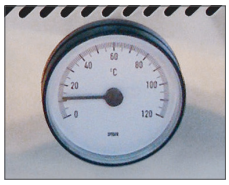

Temperature gauge

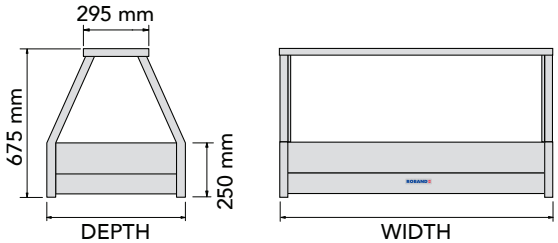


Note: RD signifies roller doors included. Sneeze guards cannot be fitted to the control panel side of single row food bars when roller doors are installed.

Note: Hot food display bars are suitable for short-term food display. They are not a suitable substitute for a chicken humidifier.

They are also designed to accommodate pans available from Roband Australia. Although other brands of pans may fit, this is not guaranteed due to variations in other manufacturers' pans. Hot food display bars are designed to be served around and not over. If units are to be used in a serve over capacity, protection from hot surfaces will need to be considered. Environmental influences will affect the operating performance of hot food displays. Consideration should be given to food types, air movement and ambient temperatures before specifying. For dry, fried foods, roller doors are highly recommended.



December 2025

ROBAND®

**Roband Australia Pty Ltd**
1 Inman Road, Cromer, NSW 2099
P +61 2 9971 1788 | E sales@roband.com.au | W roband.com.au

## DIMENSIONS

All measurements are in millimetres ~

### E14 & E14RD

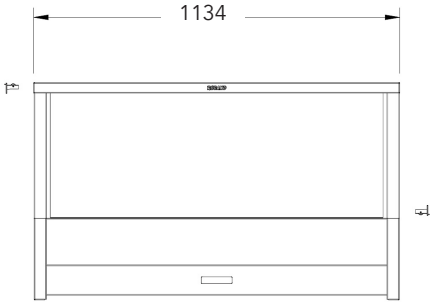


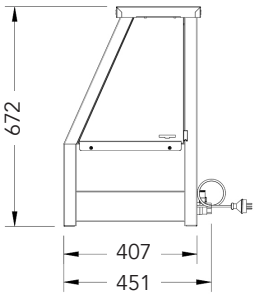


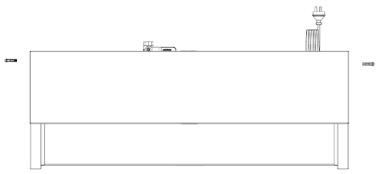

### E16 & E16RD

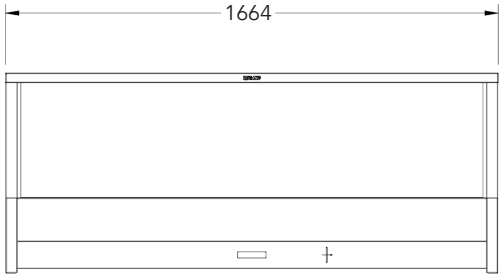


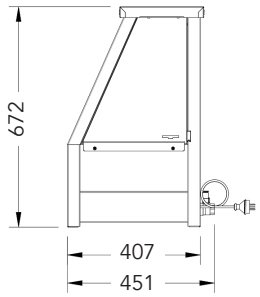


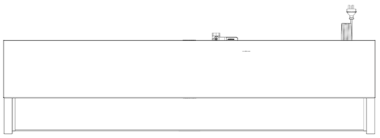

### E22 & E22RD

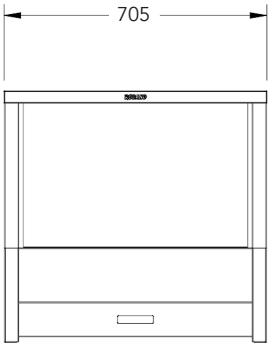


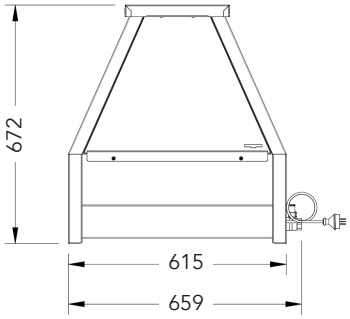


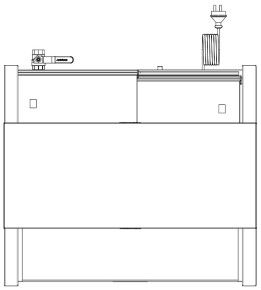

### E23 & E23RD

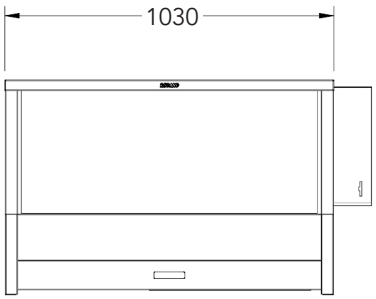


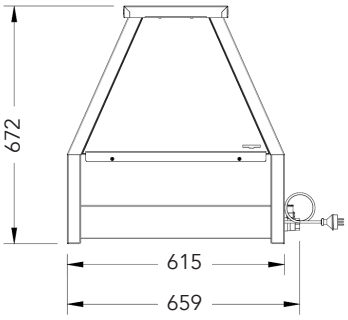


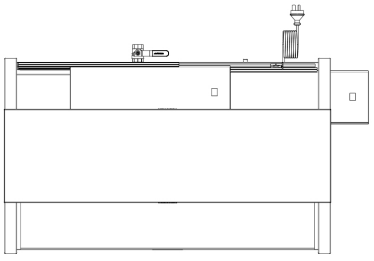

~Line drawings not to scale



December 2025

**Roband Australia Pty Ltd**
1 Inman Road, Cromer, NSW 2099
P +61 2 9971 1788 | E sales@roband.com.au | W roband.com.au

E24 & E24RD

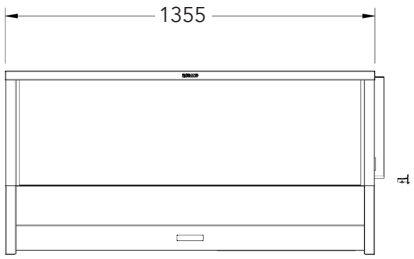


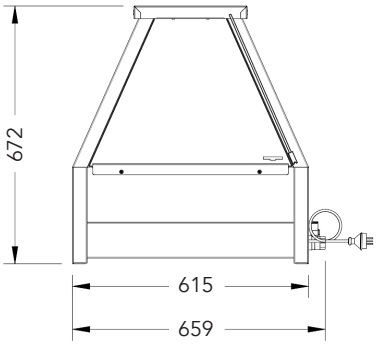


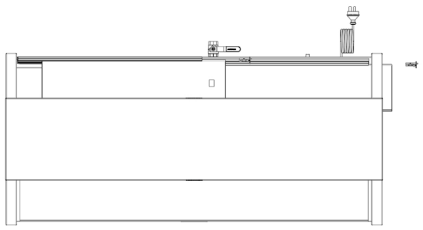

E25 & E25RD

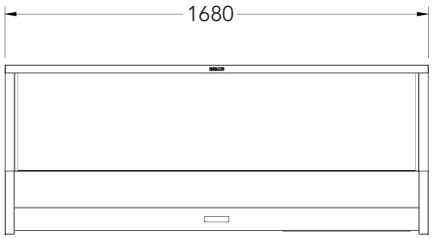


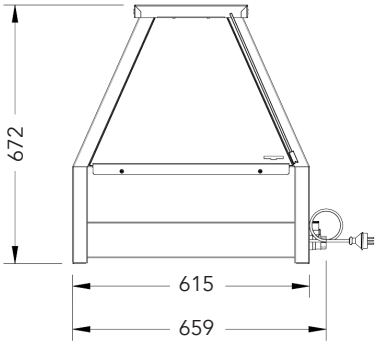


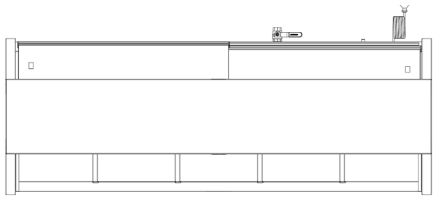

E26 & E26RD

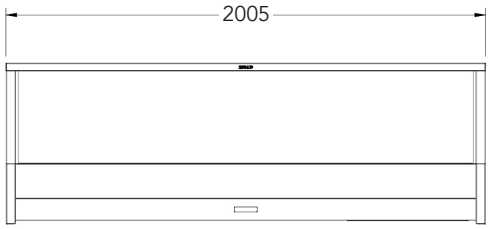


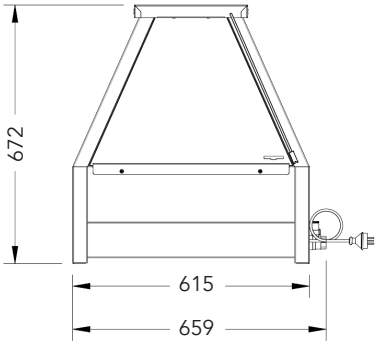


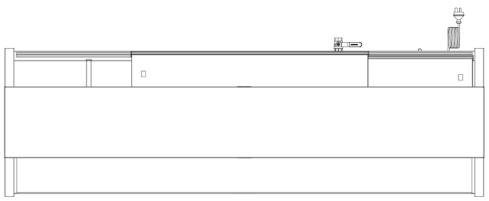

~Line drawings not to scale



December 2025

**Roband Australia Pty Ltd**
1 Inman Road, Cromer, NSW 2099
P +61 2 9971 1788 | E sales@roband.com.au | W roband.com.au